MECHANICS OF SOLIDS
ME-201
MID-SEM PROJECT

To Design & Study the Stresses in a Bridge

*The following works are performed and the project is prepared by **Pranav Mittal (2K19/ME/168)** and **Priyanshu Nailwal (2K19/ME/172)** for the purpose of Mid-semester Project Evaluation for Engineering Materials and Metallurgy and submitted to Prof. Sanjay Kumar.*

ABSTRACT

A bridge is a structure developed to span physical obstacles like a road, valley, or water in such a way that the passage underneath isn't closed. The purpose of this study is to design a bridge having a maximum stiffness to weight ratio using Topology optimization software like SolidWorks. AISI 304 is the material used for constructing the bridge. The mass reduction has been shown in 3 different analyses- 30%, 50%, and 65%.

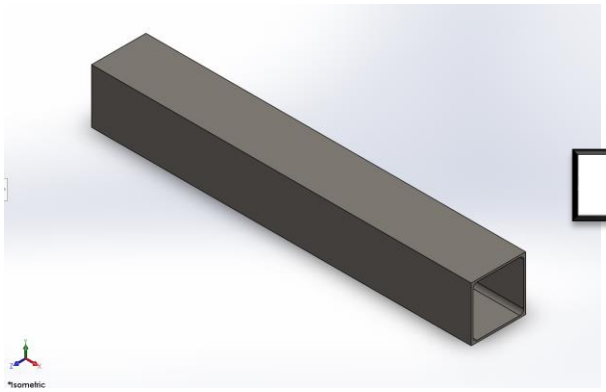

BEFORE OPTIMIZATION

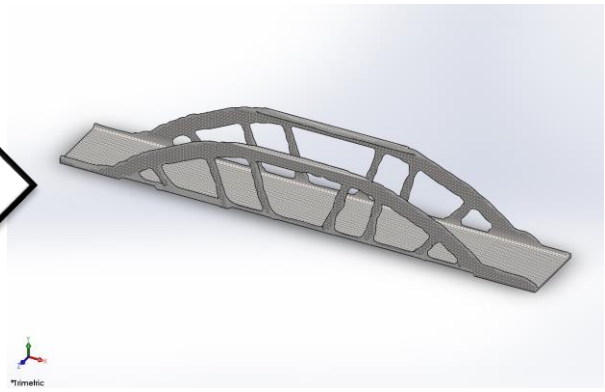

AFTER OPTIMIZATION

TOPOLOGY OPTIMIZATION

Topology optimization (TO) is a mathematical method that optimizes material layout within a given design space, for a given set of loads, boundary conditions, and constraints with the goal of maximizing the performance of the system. TO is different from shape optimization and sizing optimization in the sense that the design can attain any shape within the design space, instead of dealing with predefined configurations.

Topology optimization approach

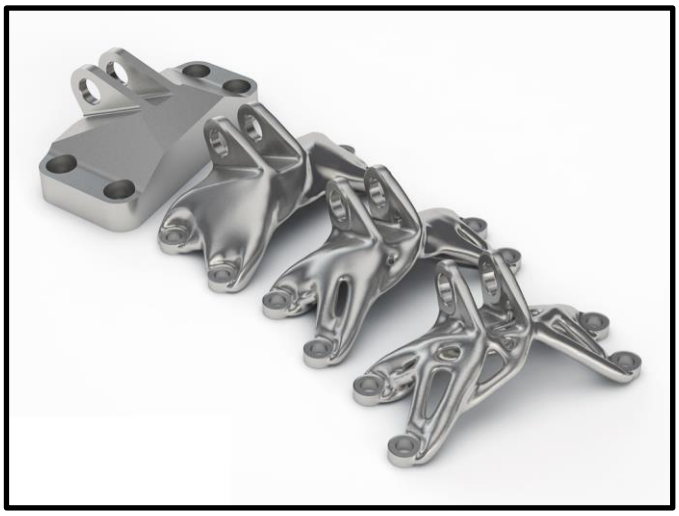

The first step when setting up a topology optimization is the definition of the design space, this is the area used by the solver for the optimization. When the solver has to perform an optimization it removes material from the design space that is not needed, it cannot add material, for this reason, it is important to assign a design space that is large enough so the solver can keep removing material until it finds the best topology.

The next step in the optimization setup is the application of geometric restrictions. A geometric restriction places restrictions on the changes that the solver can make to the topology, this can be interpreted as the areas that are not allowed to change during the optimization process. In technical terms, these regions are called the frozen regions. During the optimization, the solver will leave these regions as they are while extracting surrounding material to find the best topology.

An also important step is the determination of the optimization objective. This step defines what we want to achieve with the optimization. Most of the time with topology optimizations it is the case that we want to maximize the stiffness while minimizing the volume of the model. The increased stiffness is achieved by minimizing the strain energy in the model. It is also possible to optimize towards other objectives such as certain Eigen frequencies or local displacements.

Benefits of Using Topology Optimization

- A faster design processes
- Lighter and stronger parts

MATERIAL USED

The material used for making this bridge is AISI 304. It is a widely used austenitic chromium-nickel stainless steel. It is highly corrosion resistant and very good formability. Few of its basic properties are mentioned in the table below.

Property	Value	Units
Elastic Modulus	1.9e+11	N/m^2
Poisson's Ratio	0.29	N/A
Shear Modulus	7.5e+10	N/m^2
Mass Density	8000	kg/m^3
Tensile Strength	517017000	N/m^2
Compressive Strength		N/m^2
Yield Strength	206807000	N/m^2
Thermal Expansion Coefficient	1.8e-05	/K
Thermal Conductivity	16	W/(m·K)
Specific Heat	500	J/(kg·K)
Material Damping Ratio		N/A

Chemical composition for this material is as follows:

ELEMENT	WEIGHT
Iron	66.74%-71.24%
Chromium	17.5%-19.5%
Nickel	8%-10.5%
Manganese	2%
Silicon	1%
Nitrogen	0.11%
Carbon	0.07%
Phosphorous	0.05%
Sulphur	0.03%

INITIAL MODELLING

We made the Initial CAD model of a Bridge shown below. The length of the bridge is 15m.

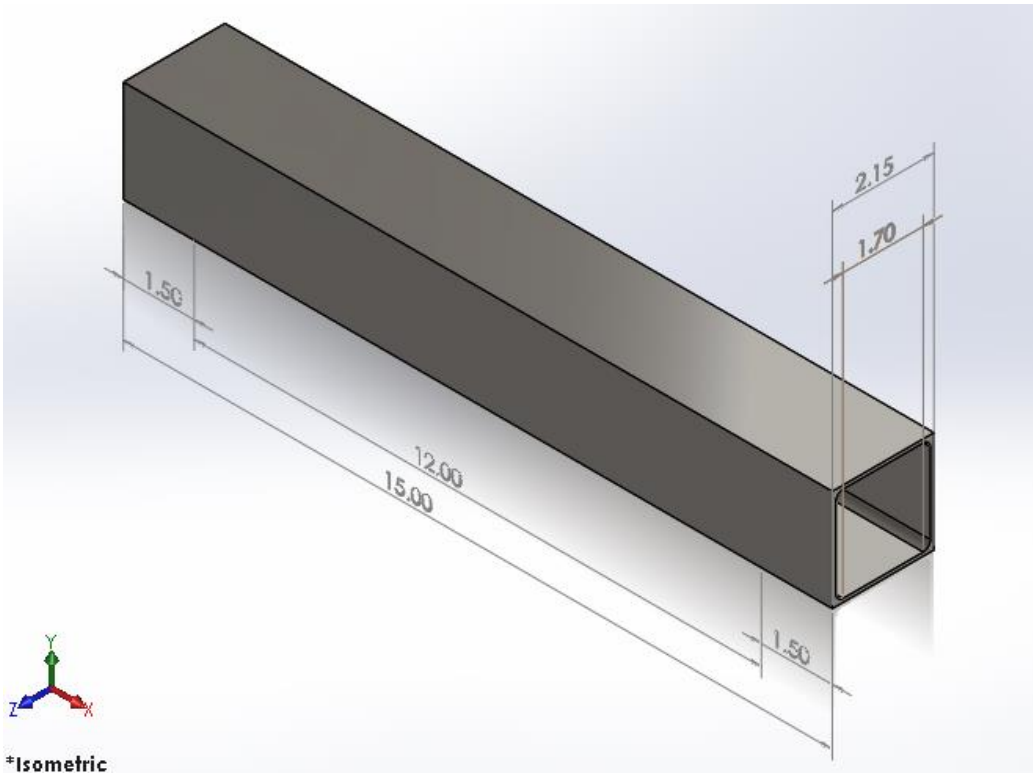

Static Analysis

Force- 30,000N per item
Fixture- At ends (1.5m)

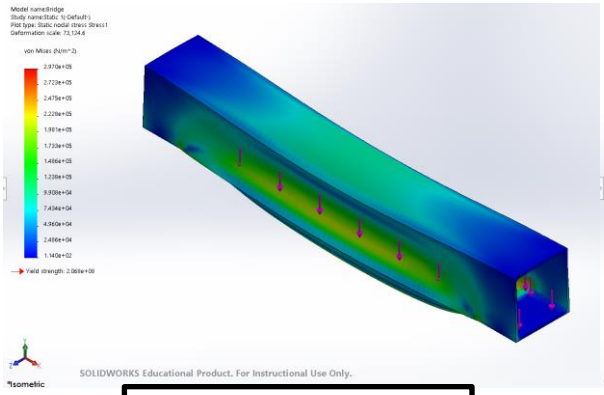

Variable Stresses

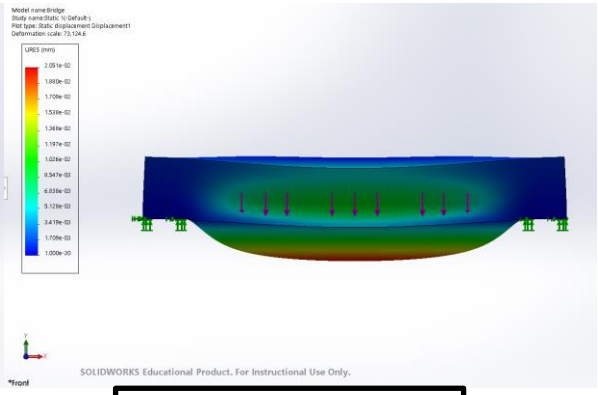

Variable Displacement

30% Mass Reduction Using Topology Optimization

We used Topology Optimization Feature to reduce mass by 30% with force on base equals to 30,000Ns.
The following structure was simulated.

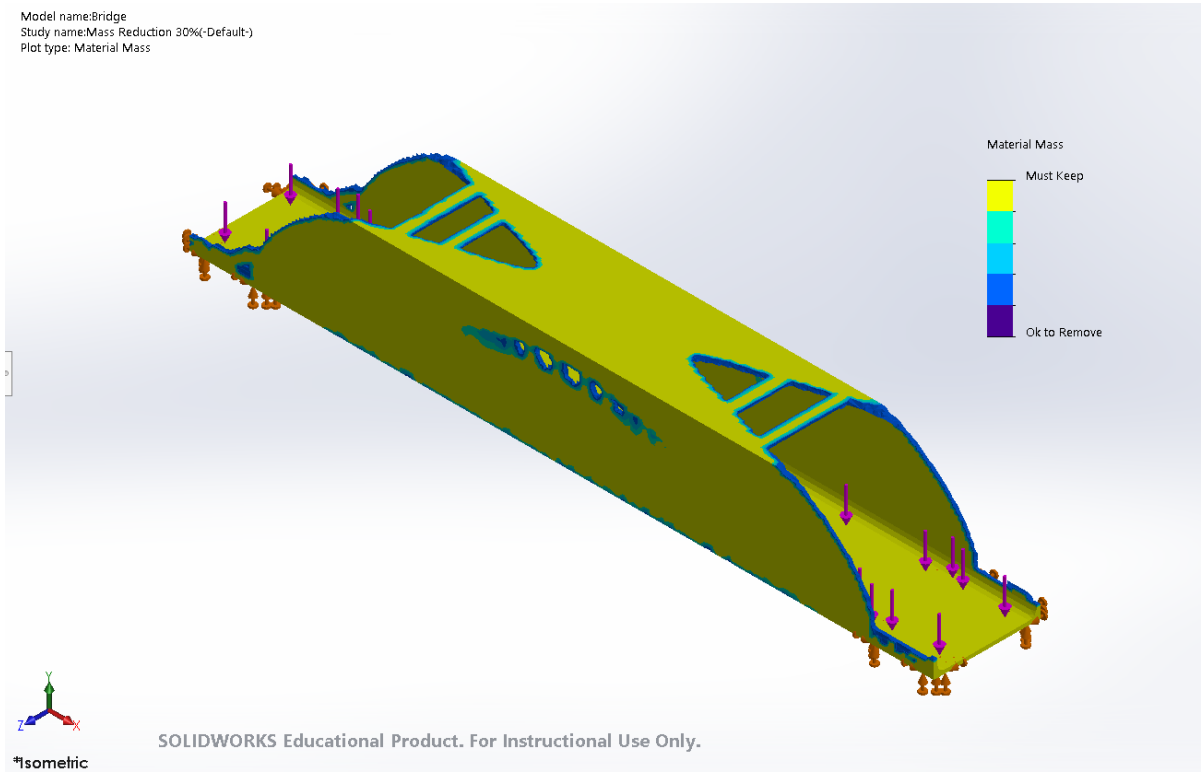

Static Analysis

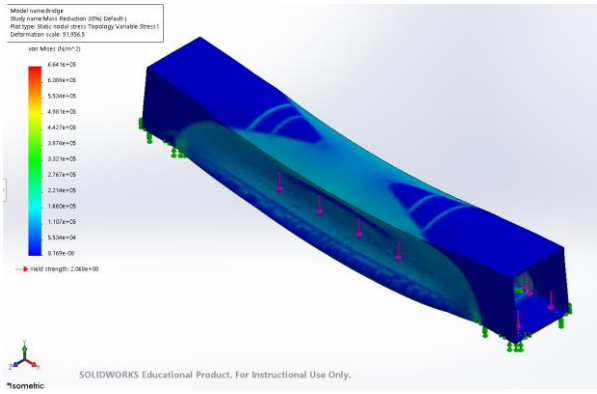

Variable Stresses

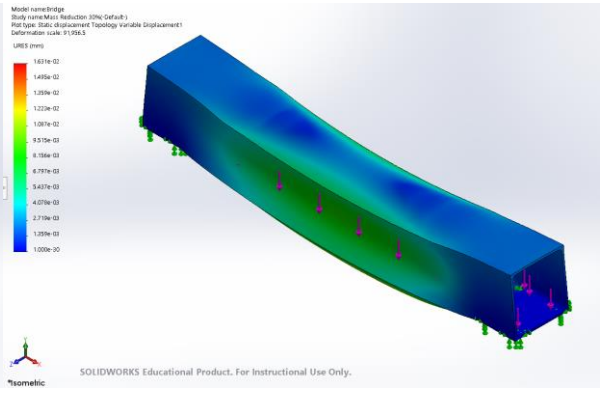

Variable Displacement

50% Mass Reduction Using Topology Optimization

We used Topology Optimization Feature to reduce mass by 50% with force on base equals to 30,000Ns.
The following structure was simulated.

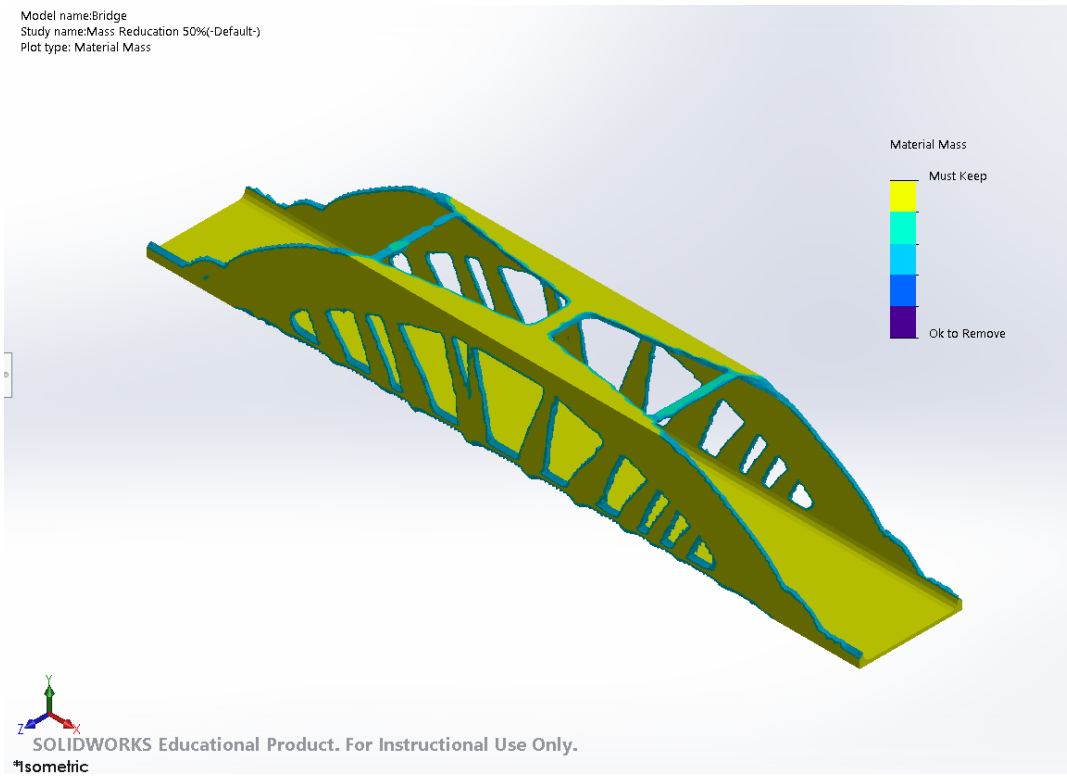

Static Analysis

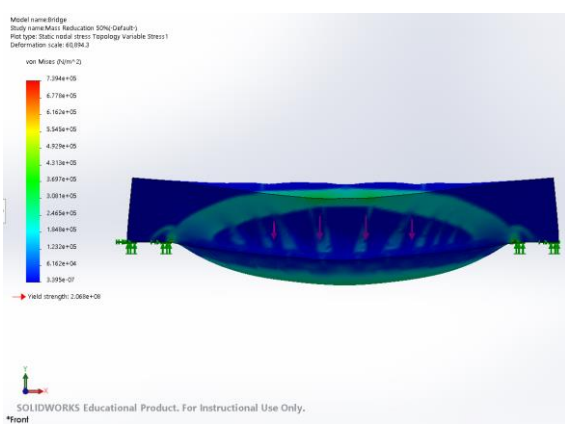

Variable Stresses

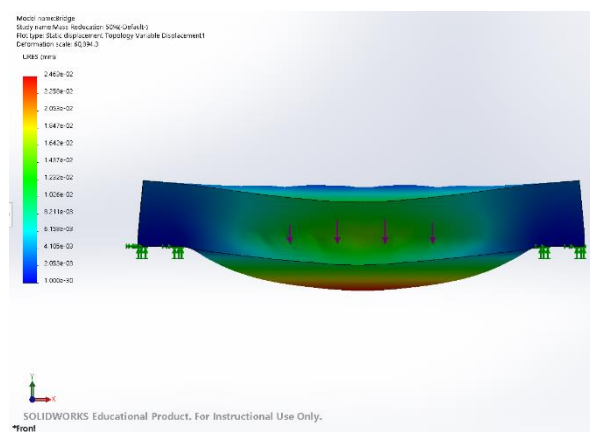

Variable Displacement

65% Mass Reduction Using Topology Optimization

We used Topology Optimization Feature to reduce mass by 65% with force on base equals to 30,000Ns.

The following structure was simulated.

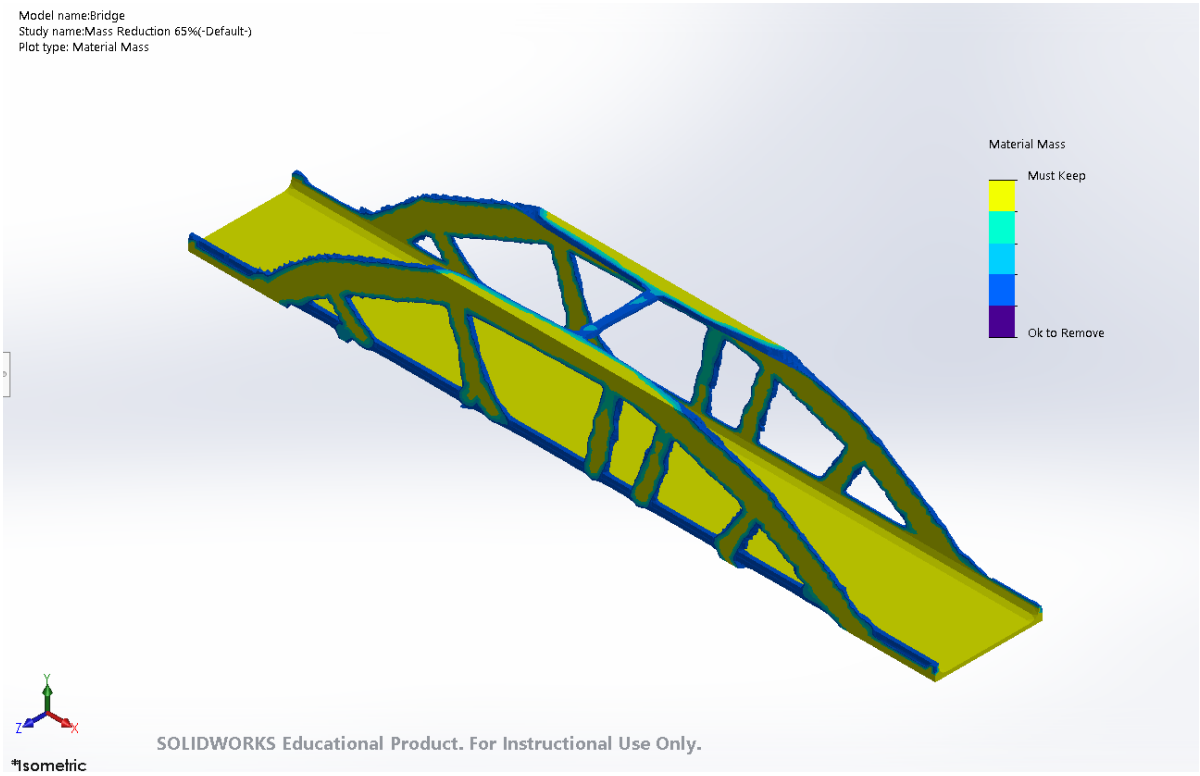

Static Analysis

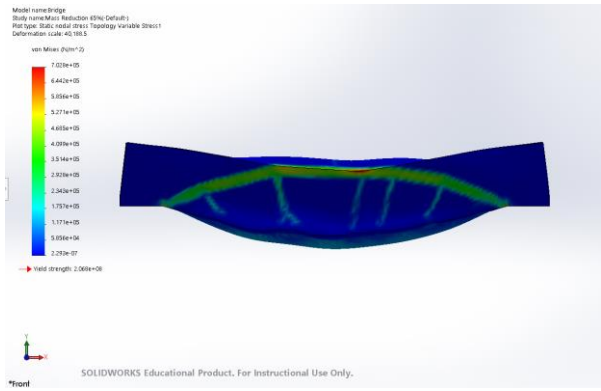

Variable Stresses

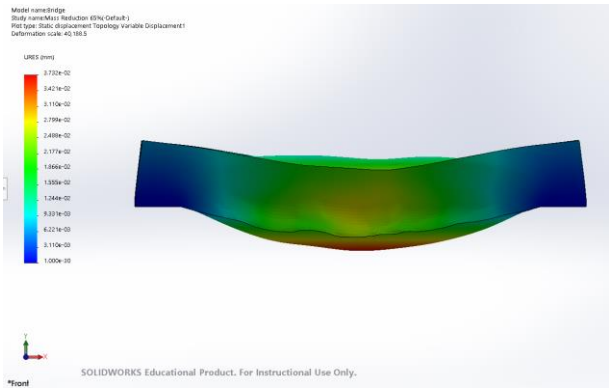

Variable Displacement

FINAL MODEL

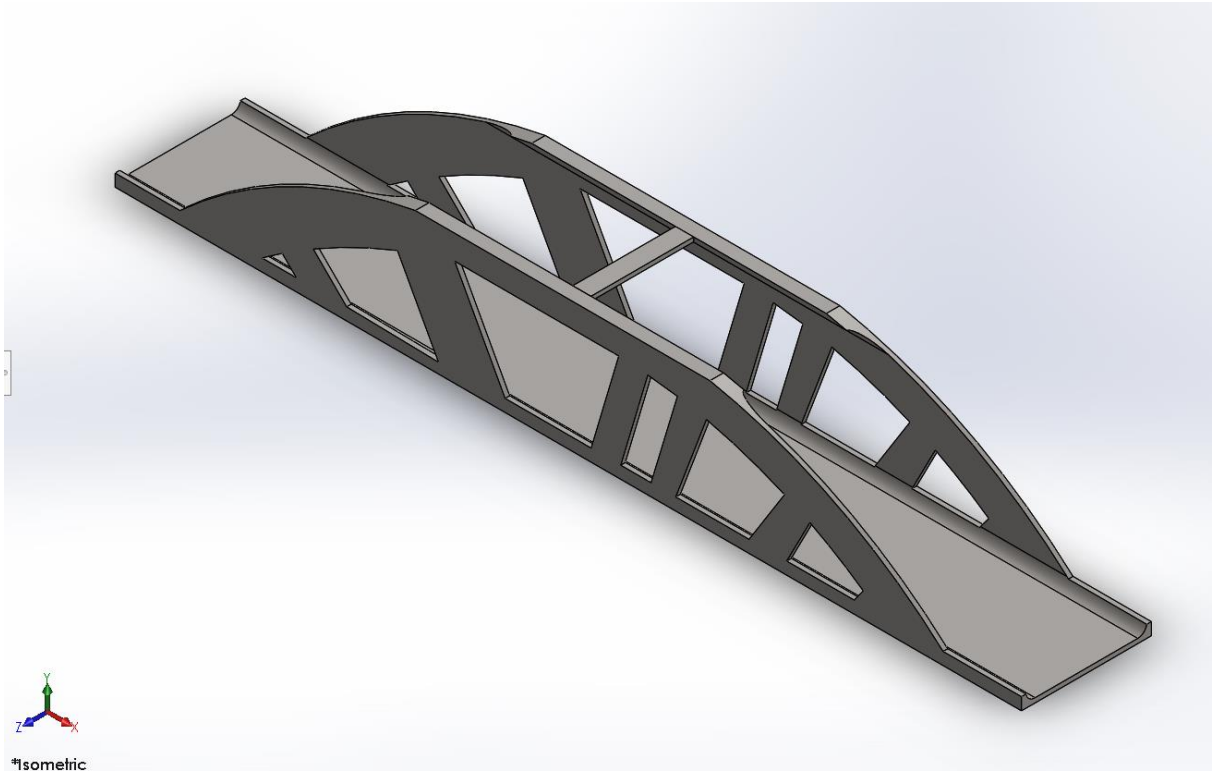

Static Analysis

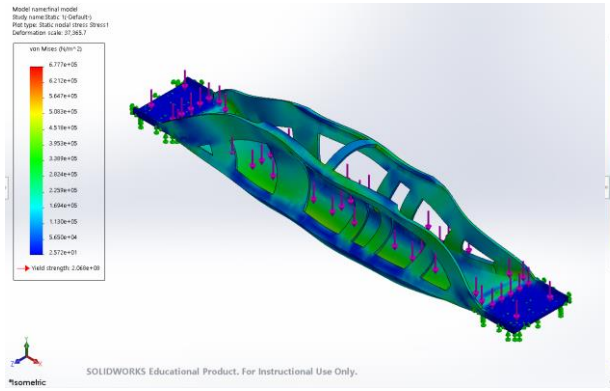

Variable Stresses

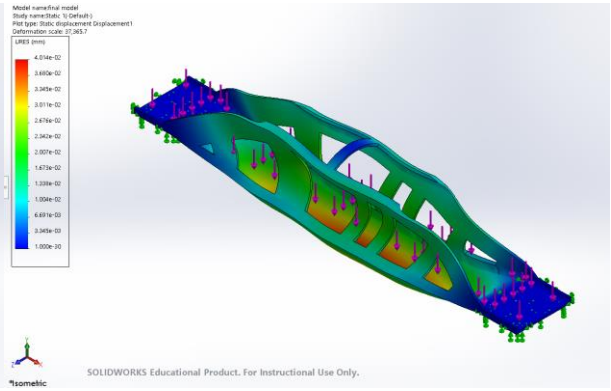

Variable Displacement

CONCLUSION

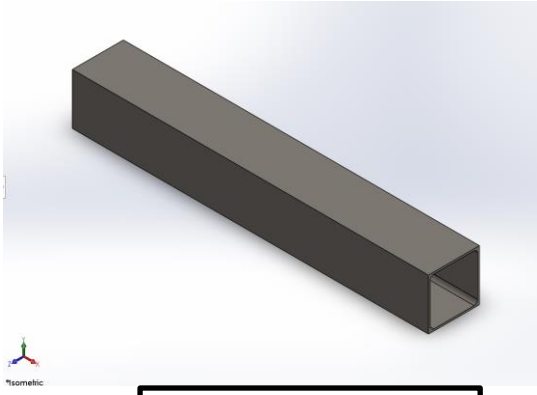

Initial Model

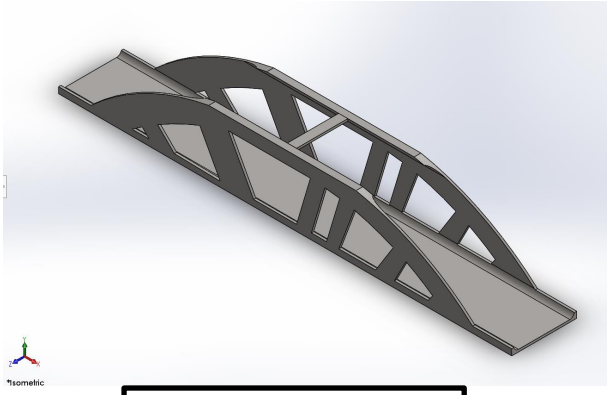

Final Model

Using the Topology Optimization Feature in SolidWorks, we obtained different bridge models for different required masses i.e. 70%, 50%, and 35% of the original mass. The Stiffness to weight ratio of the following models are as follows:

Mass Reduction	Stiffness	Weight	Stiffness to Mass ratio
30%	0.118291	54129.1 kg	2.18534×10^{-6}
50%	0.16831	38631.3 kg	4.35682×10^{-6}
65%	0.263665	27233 kg	9.68181×10^{-6}

Thus, 65% reduction of mass gives highest stiffness to mass ratio.

Using 65% reduced mass structure as template, we created the final model of our bridge having Maximum Stiffness to Weight Ratio.

Hence, by using Topology Optimization we can create parts having low weight, high strength etc. easily.